

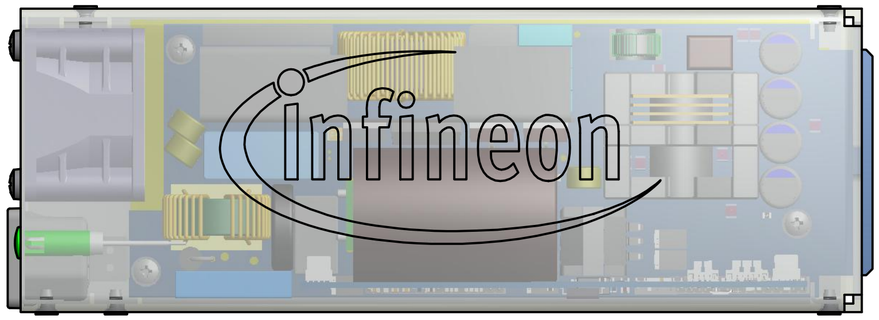

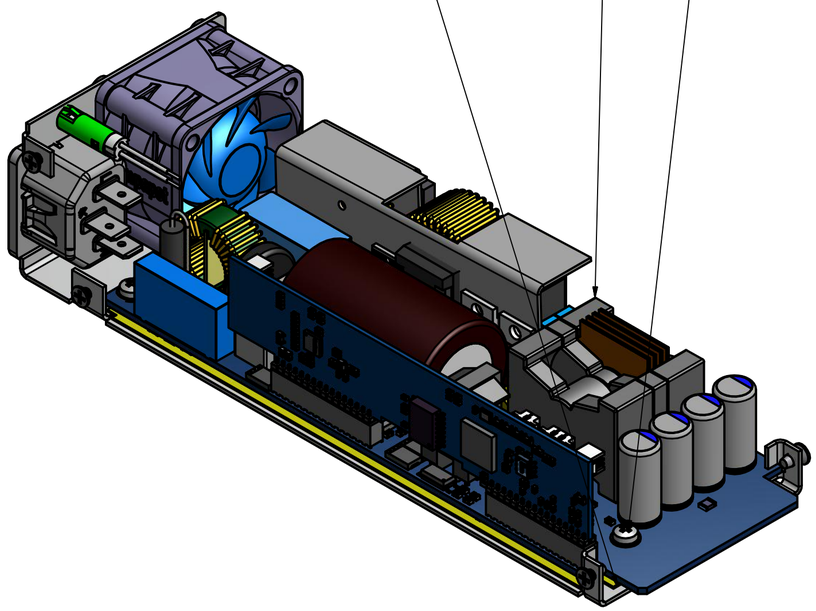

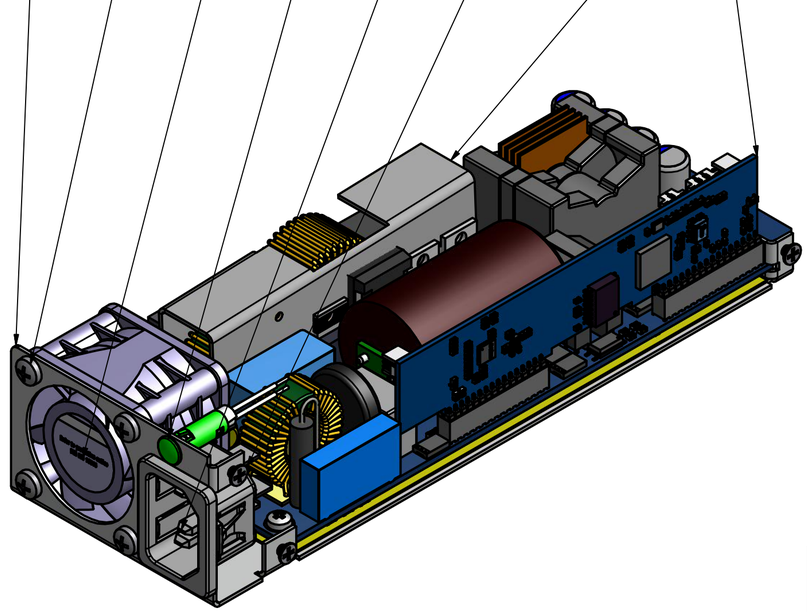

PARTS LIST			
ITEM	QTY	PART NUMBER	DESCRIPTION
1	1	EVAL_800W_PSU_4P_C7_metall-frame_V1	Metall base
2	1	EVAL_800W_PSU_4P_C7_isolation_base_V1	Isolation plate
3	1	EVAL_800W_PSU_4P_C7_plastic-cover_V1	Plastic cover
4	4	TR FASTENINGS 3.510PRST30TC1D	Screw, Thread Forming, M3.5, 10 mm, Zinc, Steel, Pan Head Pozidriv
5	1	Fan	San Ace40 9GA0412P3H01
6	1	Indicactor LED	APEM QS63XXR12
7	1	AC Inlet	Schurter 6150.5510
8	5	ANSI B18.6.5M - M3x0,5 x 6	Cross Recessed Flat Countersunk Head Tapping Screw - Type T - Type I - Metric
9	1	EVAL_800W_PSU_4P_C7_mainboard	Mainboard
10	3	DIN 7985 (H) - M3x4-H	Cross recessed raised cheese head screws - Type H
11	3	JIS B1252 - 3 1L	Conical Spring Washer
12	1	Bulk capacitor daughter board	
15	1	Heatsink K1 Main HS V2.4	
16	1	800W PSU 3.1 Control Board	

	Datum	Name
Gezeichnet	09.11.2016	schmoelb
Kontrolliert		
Norm		

Status	Änderungen	Datum	Name

EVAL_800W_PSU_4P_C7_1PSU_c

A2